LED Explosion Proof Light
R Series

R2



R4



TECHNICAL SPECIFICATIONS - R Series

Certifications

ATEX:	IECEx:	UL844:
II 2 G Ex db eb mb IIC T5/T6 Gb	Ex db eb mb IIC T5/T6 Gb	Class I, Division 2, Groups A, B, C, D
II 2 D Ex tb IIIC T95°C/T85°C Db IP66	Ex tb IIIC T95°C/T85°C Db	Class II, Division 1, Groups E, F, G
		Class II, Division 2, Groups F, G

Marine:	Ambient Temperature:	
UL 1598	Normal: -40°C to 45°C/60°C (-40°F to 113°F/140°F)	
UL 844	Emergency: -10°C to 45°C/60°C (14°F to 113°F/140°F)	Class III
	IP66	

Features

- Backup battery is optional.
- AC or DC power supply is available.
- Stainless-steel body and PC cover.
- Heavy-duty and high impact resistance.
- High-quality SMT LED and Meanwell driver.
- 6 Water-proof, vapor-proof, dust-proof, and corrosion resistant.
- 5-year warranty.

Typical applications include:

- Oil and gas industry
- Ocean, marine and aerospace field
- Food and alcohol industry
- Chemical industry
- Metal treatment
- Other high humidity, high dust, high temperature, vapor locations.

Photometry:

Beam angle: 120°

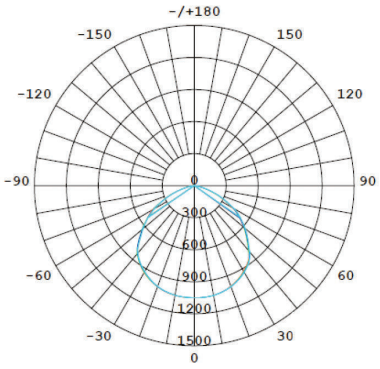

A brighter future with Constellation Lighting

Call us: (832) 717-5750

21175 Tomball Parkway, Suite 114, Houston TX, 77070

info@constellationlighting.us : www.constellationlighting.us

TECHNICAL SPECIFICATIONS - R Series

Technical Data

Model	Wattage	Operating Voltage	Efficacy (lm/W)	Total Lumens (lm)	CRI	CCT
EX-20W R2YZDA	2×10W/2ft	AC100-277/220-480V	140	2,800	>70	2200K - 7000K
EX-30W R2YZDA	2×15W/2ft	AC100-277/220-480V		4,200		
EX-40W R4YZDA	2×20W/4ft	AC100-277/220-480V		5,600		
EX-50W R4YZDA	2×25W/4ft	AC100-277/220-480V		7,000		
EX-60W R4YZDA	2×30W/4ft	AC100-277/220-480V		8,400		

DIMENSIONS R Series

R2

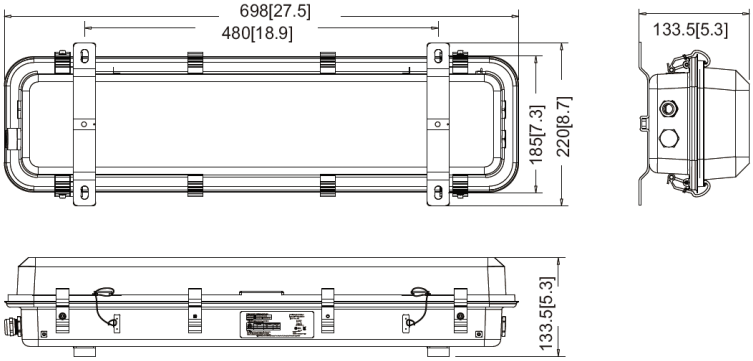

R4

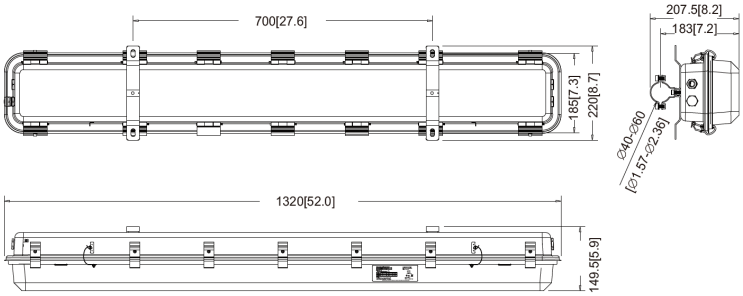

A brighter future with Constellation Lighting

Call us: (832) 717-5750

21175 Tomball Parkway, Suite 114, Houston TX, 77070

info@constellationlighting.us : www.constellationlighting.us

MOUNTING METHODS
R Series

Pendant Mounting (default mounting):

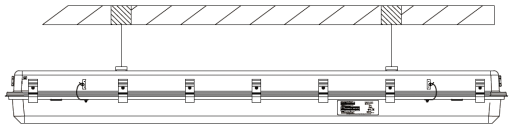

Surface Mounting (default mounting):

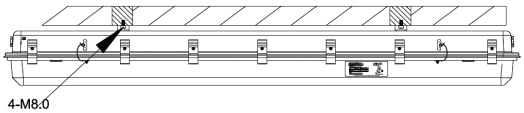

Pole Mounting (default mounting):

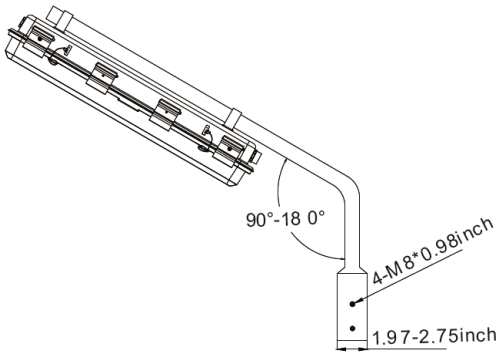

Optional Accessory:

Mounting Pole:
EX-xxW-R4YZ-G01

Mounting Clamp:
EX-BG-50



Call us: (832) 717-5750
21175 Tomball Parkway, Suite 114, Houston TX, 77070
info@constellationlighting.us : www.constellationlighting.us